AQUEA

SKIMMER

with swingloc® BASKET

- LARGE CAPACITY, EASY TO CLEAN BASKET
- HEAVY DUTY SINGLE-PIECE SKIMMER BODY
- SEAMLESS INTEGRATION WITH V-LOCK® LIDS
- MODELS FOR CONCRETE & FIBREGLASS POOLS

BUILT FOR POOL BUILDERS

DESIGNED TO PERFORM. BUILT TO LAST.

Developed in collaboration with industry, AQUEA skimmers are engineered for simple installation, dependable performance, and Australia's toughest conditions.

WHY CHOOSE AN AQUEA SKIMMER?

- Effortless basket removal and reloading with SWINGLOC®
- Set the perfect waterline using the adjustable overflow valve
- Fully integrated lid installations with the V-LOCK® Adapter Collar
- Construction caps keep skimmer clean and improves safety
- Quick & easy pipework testing with AQUEA's Pressure Test Kit

V-LOCK® LID INTEGRATION

The V-LOCK® Adapter Collar ensures accurate lid alignment and set-down for a quick, hassle-free skimmer lid installation.

WATERLINE CONTROL

Install the unique Overflow Valve to set the perfect waterline or temporarily shut off to prevent water loss during high-use events.

CLEAN & SAFE CONSTRUCTION

A flat construction cap simplifies skimmer set-up to steelwork, reduces worksite trip-hazards and avoids debris entering skimmer during construction.

ADDITIONAL CONNECTIVITY

Simple connection to auto-fillers and balance lines via the integrated 25mm (DN25) auxiliary port.

SUPERIOR DURABILITY

UV-resistant polymers and robust engineering ensure the AQUEA Skimmer delivers long-lasting reliability and performance.

EFFORTLESS OPERATION

The 5.5L basket handles larger loads and longer cleaning intervals, while the intuitive SWINGLOC® action makes basket removal and reloading easy.

EASY INSTALL AND TESTING

Superior installation flexibility with rear and bottom 50mm (DN50) outlets. Pipework testing is also simple with AQUEA's Pressure Test Kit.

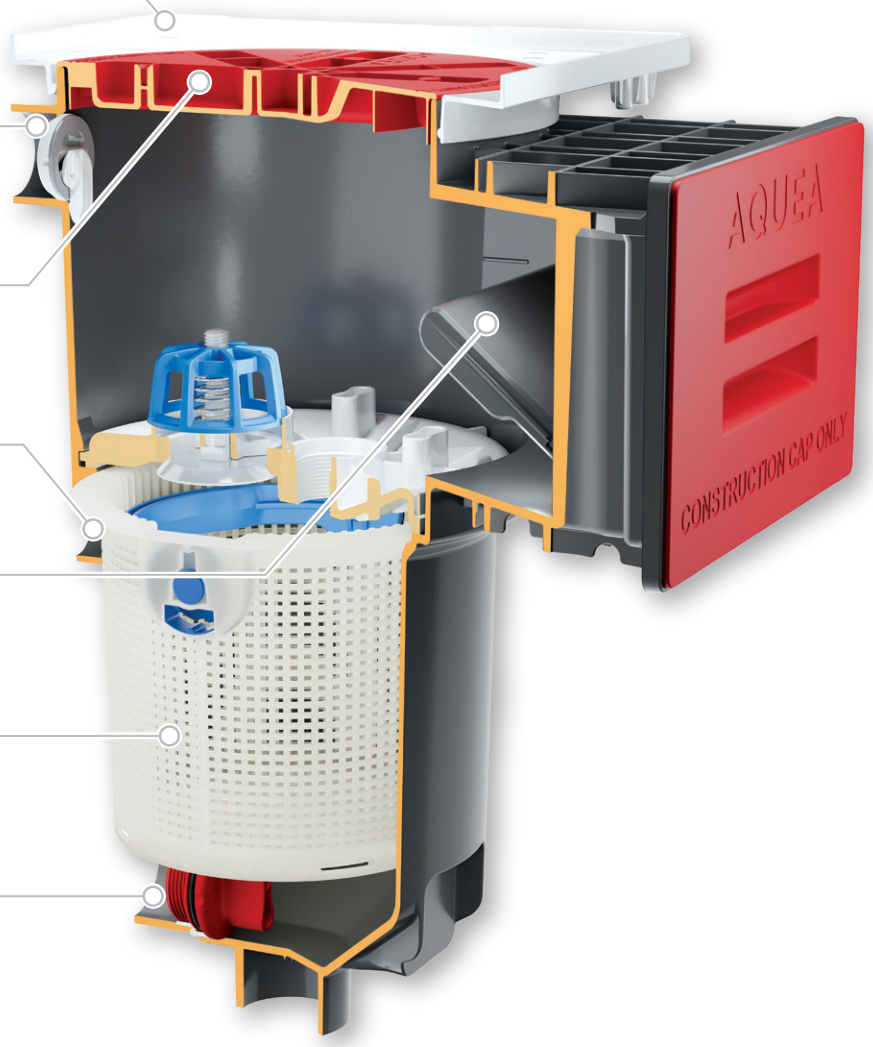

What is swingloc®?

The patent-pending **SWINGLOC®** system makes basket cleaning effortless. Simple drop-in alignment and intuitive two-way handle action eliminates awkward locking, jamming and breakage common in other skimmers.

- Rotate handle down to stow and lock basket automatically
- Swing handle up to easily and instantly unlock the basket for removal

Engineered for strength and durability, the **SWINGLOC®** basket's generous 5.5L capacity maintains consistent water flow and reduces blockages.

THE AQUEA SKIMMER RANGE

Designed with builders in mind, the AQUEA Skimmer Range delivers practical features, robust engineering, and quality construction in one reliable solution.

CONC
MODEL

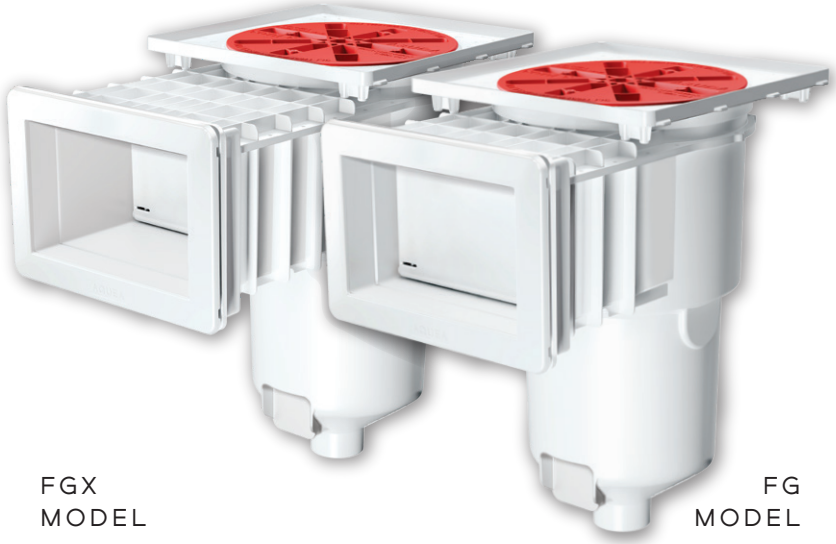

FGX
MODEL

FG
MODEL

CONCRETE POOLS

Designed for concrete pools, the CONC model comes ready to hang, with pre-assembled construction caps for easy install and to protect skimmer during the build.

FIBREGLASS POOLS

The FG range provides a clean finish, dependable sealing and easy installation for fibreglass pools, with a choice of standard or extended' throats to suit any pool shell.

STANDARD FEATURES - ALL MODELS:

- Compliant with AS1926.3-2010 when fitted with a child-resistant lid
- Heavy-duty, one-piece body for superior strength and durability
- Construction Lid to prevent debris entering skimmer and improved worksite safety.
- Vacuum plate with integrated flow-control valve

CONCRETE [CONC MODEL]

- Multiple mounting options for secure fastening to reinforcing steelwork
- Front Construction Cap prevents debris entering Skimmer during concreting
- Pressure Test Kit – for checking plumbing prior to filling pool.
- V-LOCK® Lid Adapter and Extension Collars available for purchase separately

FIBREGLASS [FG & FGX MODELS]

- Smooth, flat faces on Body and Bezel for improved silicone adhesion and sealing to pool shell
- Bezels and trim made from ASA polymer for ultimate UV stability and longevity
- V-LOCK® Lid Adapter simplifies skimmer lid installation and provides a clean, integrated finish
- Pressure Test Kit and Extension Collars available for purchase separately

*DN25, DN40 & bottom DN50 ports supplied closed and require drill-out.

[1] Extended models (FGX & FGX7) available early 2027.

5.5L capacity **SWINGLOC®** basket

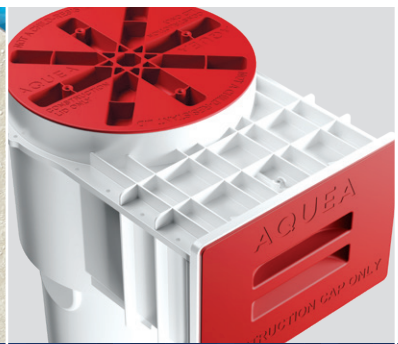

Construction Caps to keep skimmer clean during build

Adjustable Overflow Valve for precise waterline control

Adapter for integrated V-LOCK® lid installation

SPECIFICATIONS

	CONCRETE [CONC]		FIBREGLASS [FG]		FIBREGLASS [FGX]*	
	549-202	549-202-GR	549-206	549-206-LG	549-213	549-213-LG
COLOUR	White	Grey	White	Light Grey	White	Light Grey
THROAT LENGTH	Standard [136mm]		Standard [166mm]		Extended [250mm]	
KIT CONTENTS	> CONC Body > Weir Door > Basket > SkimTrol > Top Construction Cap > Front Construction Cap > Overflow Valve Kit > Pressure Test Cap Kit		> FG Body > Weir Door > Basket > SkimTrol > Top Construction Cap > Overflow Valve Kit > V-LOCK Adapter Collar > Bezel Mounting Kit		> FGX Body > Weir Door > Basket > SkimTrol > Top Construction Cap > Overflow Valve Kit > V-LOCK Adapter Collar > Bezel Mounting Kit	
MATERIAL	> Skimmer Body - **ABS** > Weir Door - **ASA & PP** > Basket - **PP** > SkimTrol - **ABS & PC**		> Construction Lid - **PP** > Front Construction Cap - **PP** > Overflow Valve Kit - **ABS & TPE** > Pressure Test Kit - **ABS**		> V-LOCK Adapter Collar - **ABS** > Front Bezel - **ASA** > Front Bezel Trim - **ASA**	
WARRANTY	12 Months		12 Months		12 Months	

*FGX Available 2027

KEY DIMENSIONS

All dimensions in mm | Tolerance +/- 1.5 mm

CONCRETE - [CONC]

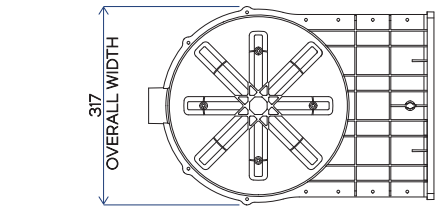

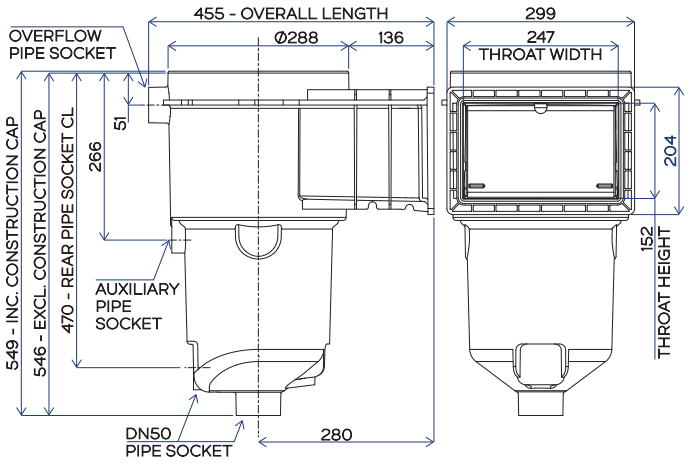

FIBREGLASS - [FG & FGX]

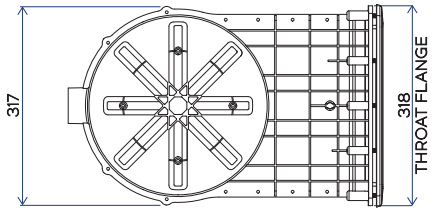

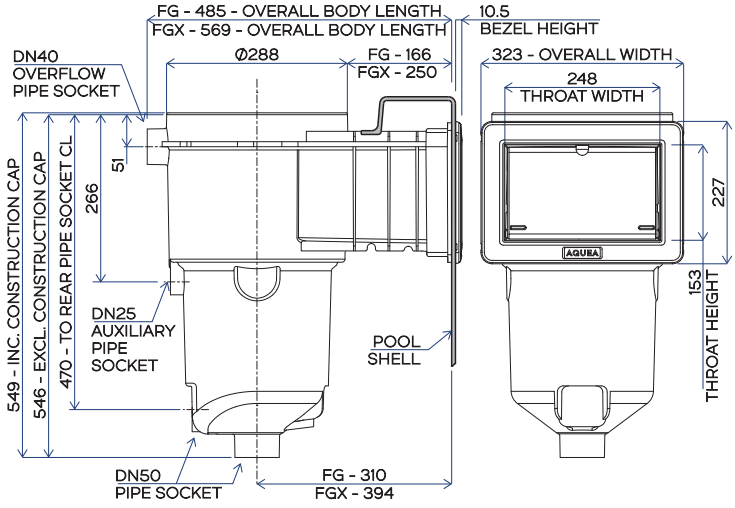

AQUEA®, V-LOCK® and SWINGLOC® are registered trademarks.
The contents of this document are the exclusive copyright of AQUEA® and may not be reproduced without written permission. © 2026
Whilst every care was taken in preparation of this document, AQUEA® accepts no responsibility for the accuracy of the information supplied.

Specifications subject to change without notice.

AQUEA
HELLO@AQUEA.COM.AU WWW.AQUEA.COM.AU 0481 875 870

BUILD A BETTER POOL